Integrated Services Digital Network (ISDN)

12.1.1. Overview

The integrated Services Digital Network (ISDN) is a set of digital transmission standards which are used for end-to-end digital connectivity. ‘‘Integrated Services’’ referring to its ability to sustain numerous applications. ‘‘Digital Network’’ relating to its end-to-end digital connection. In general, ISDN networks extend from the local telephone exchange to the remote user and include all the telecommunications and switching equipment’s in between. ISDN supports voice and data. In the past, video, audio, voice and data services required at least four separate networks. ISDN integrates all four over the same network.

History. ISDN is based on technology developed during the 1970’s designed to address the problem of how to transport digital services across a telephony infrastructure based on copper wiring originally intended to carry analog signals only. To meet the customer needs, initially, the telephone companies created Integrated Digital Networks (IDN). IDN is a combination of networks available for different purposes. Access to these networks is by digital pipes which are time multiplexed channels sharing very high speed paths. By this network, customers can use their local loops to transmit both voice and data to their telephone company’s central office. The office then directs these calls to the appropriate digital networks via the digital pipes. ISDN integrates customer services with the IDN. With ISDN, all customers will become digital rather than analog.

Standards. ISDN technology is standardized according to recommendation of the CCITT, now ITU, which describe the protocols and architectures to implement a worldwide digital communication network. The CCITT was comprised to study groups (SGs). Each SG has its own area of expertise. The following are the SGs related ISDN.

SG VII — Public data network (X.25) X-series standards

SG VIII — Terminal equipment for telematics services

SG XI — ISDN and telephone network switching and signaling

SG XII — Transmission performance of telephone networks and terminals
SG XV — Transmission systems
SG XVII — Data transmission over public telephone networks
SG XVIII — Digital networks including ISDN.

Types of ISDN. There are two types of ISDN:

Narrow band ISDN (N-ISDN) and Broadband ISDN (B-ISDN)

N-ISDN — Carry data rating upto 64 kbps, ranging up to T1 rates. Sometimes used to refer to regular telephone and no video capable systems.
B-ISDN — The communication standards being developed by the ITU to handle the high bandwidth applications such as video. B-ISDN will use ATM technology over SONET based transmission units to provide data rates of 155 Mbps to 622 Mbps and beyond.

12.1.2. ISDN Services

ISDN services generally fall into three categories. They are bearer services, teleservices and supplementary services.
Bearer services. ISDN works on the principle of transport services known as bearer services. The bearer service offers the capability to transport digital voice or novice services using this standard. The basic operation of the bearer service is the 64 kbps channel capacity. Bearer services provide the means to transfer information (voice, data and video) between users. The network does not need to process the information. Bearer service belongs to the first three layers of OSI model. These services can be provided with circuit switched, packet switched, frame switched or cell switched networks.
Tele services. In this service, the network may change or process the contents. This service corresponds to layers 4–7 of the OSI model. Tele services include telephony, telefax, video fax, telex and teleconferencing.

Supplementary services. It provides additional functionality to the bearer service and teleservices. Supplementary services include call waiting, Reverse charging, and message handling.

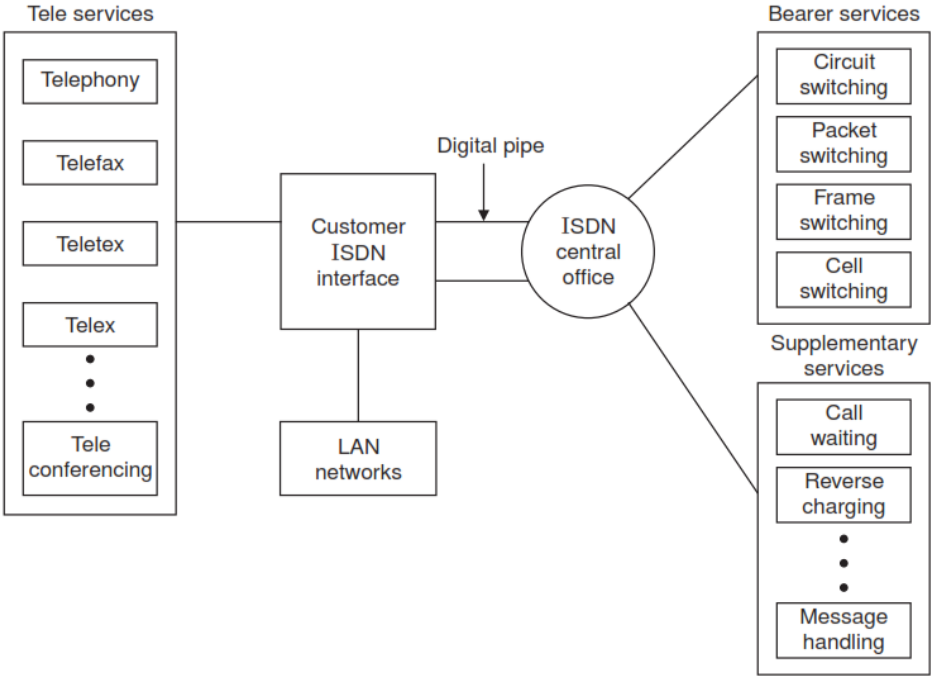

The objective of ISDN was introduced in 1979. The concept is the digital end to end connectivity to support a wide range of services. The reason for this concept is the obsolescence and cost prohibitive nature of the analog technology. ISDN uses the existing networks to provide the above discussed services. To access to the various services, the user had to subscribe to a particular network. The existence of integrated networks will allow for user management of the entire telecommunications functions through the single thread to the outside world. Hence ISDN provide the user with easy access to multiple service over a single connection to the network.

12.1.3. Advantages of ISDN

1. **High speed service.** ISDN is fast. As there is no need of conversion of analog to digital inside a digital network, the speed is high. Table 12.1 shows the speed comparison of various devices.

Table 12.1. Speed comparison

Type	Data rate
MODEM	28.8 kbps
ISDN 1B channel	64 kbps
ISDN 2B channel	128 kbps

Before ISDN, normal phone carries only 2.4 kbps. After ISDN, digital phone lines can carry 128 kbps over the same wire. Hence ISDN's speed allows very quick file transfers. The ISDN call setup (connect) also faster (2 to 4 sec) than analog devices (15 to 30 sec). ISDN can transfer two times faster than a 56 K modem.

2. **Cost advantage.** Low costs result due to reduced retransmission of information and fast information transfer. Simplified network management and maintenance results in reduced costs for international and nation-wide communication. Reduced infrastructure and maintenance costs by offering multiple services through a single network.

3. **High quality transmission.** ISDN transmits data digitally (except the link between you and telephone company) and as a result, is less vulnerable to static and noise than analog transmission. Due to digital technology, transmission is highly reliable. Voice conversation over ISDN also crystal clear, having the sound quality of an audio CD.

4. **Simultaneous transmission.** ISDN has two B channels for voice, circuit or packet conversations and one D channel to carry signals between your equipment and the phone company. Thus ISDN can perform simultaneous functions. You can send a fax; you can receive a fax.

5. **Multiple device connection.** Because ISDN lines are divided into logical channels, up to eight devices (fax, telephone, computer etc.) can be connected on a single Basic Rate ISDN in any combination. This reduces the additional wiring.

6. **Conferencing.** As eight devices could be in use simultaneously, this may result in multiple call appearances. Thus ISDN allows to handle several calls at once or conference them together with one number. This multiple call appearance is useful for small office with large number of outside sales people.

7. ISDN provides clear, quitter voice telephone service and easy to use call control features. Its caller identification features can screen incoming calls.

8. Call management features.

(*a*) **Call forwarding.** Forwards call to a preselected number.

(*b*) **Call pickup.** Call can be picked at another phone or station.

(*c*) **Directed call pickup.** Calls from specific extension be automatically forwarded to second number.

(*d*) Message Waiting indicator.

(*e*) **Directed Dial.** Incoming calls can be automatically forwarded to a central office, car etc.

(*f*) Ringing options.

(*g*) **Additional call offering.** Allows the user to use a distinctive ring to a particular call.

12.2. ISDN INTERFACES

ISDN is available with two main types of interfaces. They are Basic Rate Interface (BRI) and Primary Rate interface (PRI). These two interfaces are described below.

12.2.1. **Basic Rate Interface (BRI)**

BRI is made up of two B-channels (Bearer channels) and one D channel. Therefore, the total rate is 2B + D. B channels are 64 kbps and can be used for voice and data communications. The D channel is 16 kbps and is used for call initialization and signaling connections. Fig. 12.2 shows ISDN BRI.

BRI is the most appropriate type of ISDN service for computer connections and individual use. Of three digital channels (2B + D), of each of the channels can be used simultaneously. Thus a subscriber can perform several communications tasks at the same time. BRI is designed

to carry the most data possible to the home through existing copper phone lines.

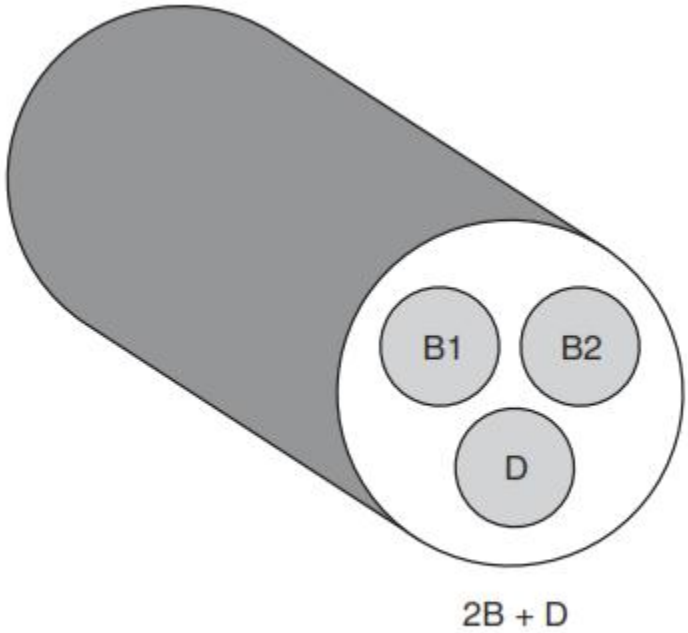

Fig. 12.2. ISDN BRI.

For every ISDN line, Network Terminator type 1 (NT 1) and a power supply are required. A special terminal adapter can combine the two B-channels to create a 128 kbps channel which can then be connected to a computer. The NT1 connected to ISDN line acts as a multiplexer and DE multiplexer. Fig. 12.3 illustrates the BRI concept.

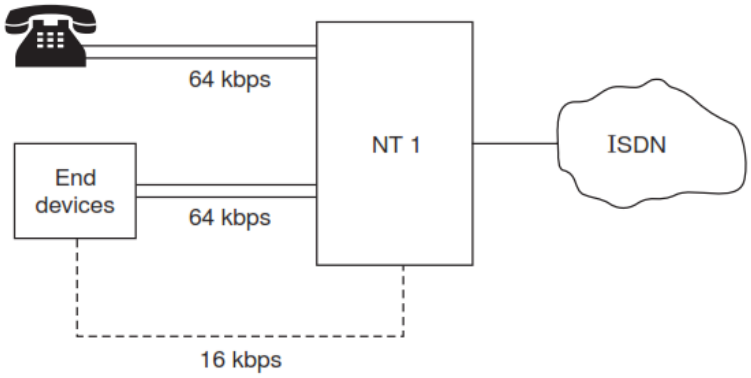

Fig. 12.3. BRI concept.

12.2.2. **Primary Rate Interface (PRI)**

PRI in North America has 23 B channels and one 64 K D channel or the total rate is 23 B + 1D, having a total bandwidth 1.544 Mbps. (including 8 kbps of overhead) PRI in rest of the world uses 30 B channels and one D channel or 30 B + D with total rate of 2.048 Mbps. The number of B channels is limited by the size of the standard trunk line used in the region. Fig. 12.5 shows the ISDN PRI interface.

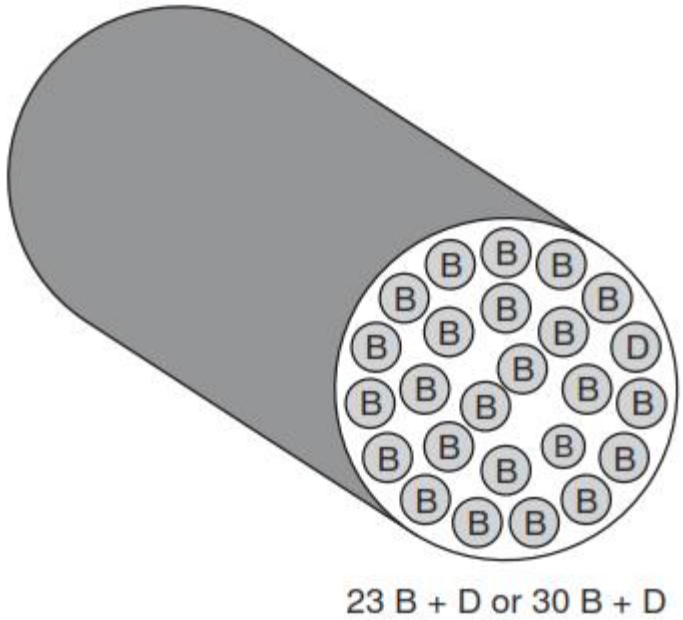

Fig. 12.5. ISDN PRI.

ISDN CHANNELS

Fig. 12.7. PRI frame format.

ISDN consists of three types of communications channels. They are:

1. Bearer channel (B channel)
2. Delta channel (D channel), and 8 bits
3. Hybrid channels (H channel).

These three ISDN channels are described below.

B channel. B channels are logical digital ‘‘pipes’’ which exist on a single ISDN line. B channel carry data and services at 64 kbps. It carries data in full duplex mode. Each B channels provide a 64 kbps clear channel, clear meaning that the entire bandwidth is available for data, B channels typically form circuit switched connections. B channel connection is an end-to-end physical circuit that is temporarily dedicated to transferring data between two devices.

The circuit switched nature of B channel connections; combined with their reliability and relatively high bandwidth makes ISDN suitable for a range of applications including voice, video, fax and data. B channels are normally used for on-demand connection. As B channel operation based on circuit switching, it can be configured as semi-permanent or ‘‘nailed up’’ connections.

D channel. D channel can be either 16 or 64 kbps, depending on the needs of the user. The primary function of the D channel is to carry control signaling and administrative information for B channels to set up and tear down the calls. The D channel uses packet switched connection. The packet switched connection are best adapted to the intermittent but latency sensitive nature of signaling traffic, accounting for the highly reduced call setup time of 1 to 2 seconds on ISDN calls. Unlike the B channel, which can function as a simple ‘pipe’, the D channel is associated with higher level protocols at layers 2 and 3 of OSI model which form the packet switched connections. The D channel provides the signaling information that is required for caller identification. It also includes low-rate data transfer and applications such as telemetry and alarm transmission.

H channels. H channels are suitable for high data rate applications such as video, teleconferencing and so on. Table 12.2 gives ISDN channel and its specifications.

Table 12.2. ISDN channels specifications

Channel	Bit rate (kbps)	Interface	Purpose
B	64	BRI	Bearer services
H0	384	PRI	6 B channels
H11	1536	PRI	24 B channels
H12	1920	PRI	30 B channels
D	16	BRI	Administrative and control signalling
D	64	PRI	,,

12.4. ISDN SWITCHING, FUNCTIONAL GROUPING AND REFERENCE POINTS

12.4.1. ISDN Switching

The process of moving data through a network is called switching. ISDN takes advantage of two types of switching. Circuit switching and packet switching. Circuit switching routes voice or data. Packet switching routes multiple data packets. The circuit switching and packet switching related to ISDN switching are described below.

Circuit switched voice (CSV) service is a digital voice service that offers many of the capabilities of a business Centrex, such as call waiting, speed calling and call transfer over an ISDN digital subscriber line (DSL). For point to point data connections, circuit switched data (CSD) service is used. CSD service provides end-to-end digital service to pass data or video information over the public network, D channel uses packet switching. Using D-channel, it is possible to implement various low bandwidth services for communicating with ISDN users. Packet switching can also be used on the B channels.

12.4.2. Functional Grouping/ ISDN Architecture:

The devices that enable users to access the services of the BRI or PRI in ISDN switching are collectively called functional groupings. The functional groupings used at the subscriber premises include Network termination 1 and 2 (NT1 and NT2), Terminal equipment 1 and 2 (TE1 and TE2) and Terminal adapters (TA). The TE1, TE2 and TA alone are described below. Fig. 12.8 shows the functional grouping.

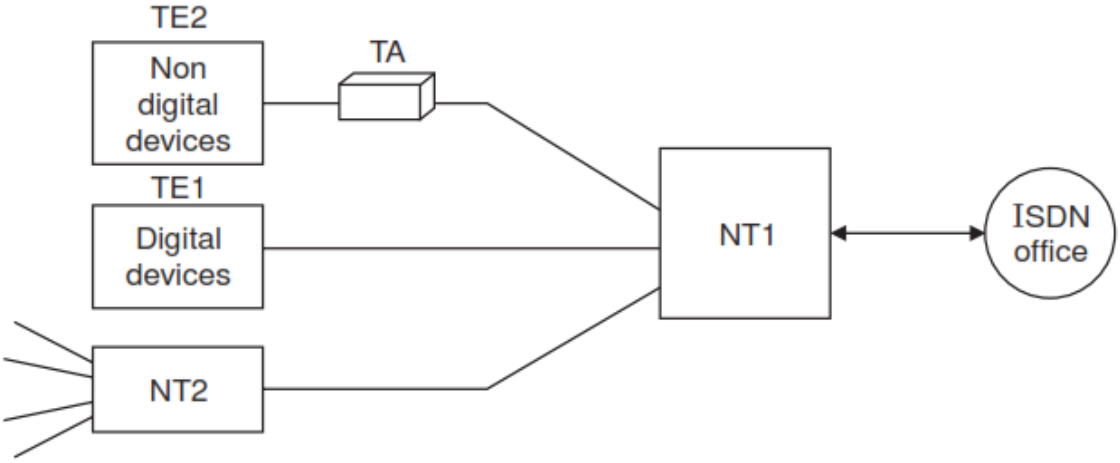

Fig. 12.8. Functional groupings.

Terminal Equipment 1 (TE1). TE1 are ISDN terminals like video conferencing equipment, Group-4, fax, feature telephone which are digital and can be directly connected to NT through 'S' bus interface.
Terminal Equipment 2 (TE 2). TE2 are non ISDN terminals such as analog phone, PC, G3, FAX which are non-digital and cannot be directly connected to NT1. They require another interface called Terminal adaptor (TA).
Terminal adapter (TA). TA enables analog to digital conversion and vice versa. Otherwise the purpose of TA is to convert the bipolar signaling from the public network to the unipolar signaling used by computers. The most prevalent use of TA is to connect a computer to an ISDN line.

12.4.3. Reference Points

Reference point refers to the label used to identify individual interfaces between two elements of an ISDN installation. It defines how two elements are connected. There are four reference points generally used. They are R, S, T and U. Fig. 12.9 illustrates the use of reference point.

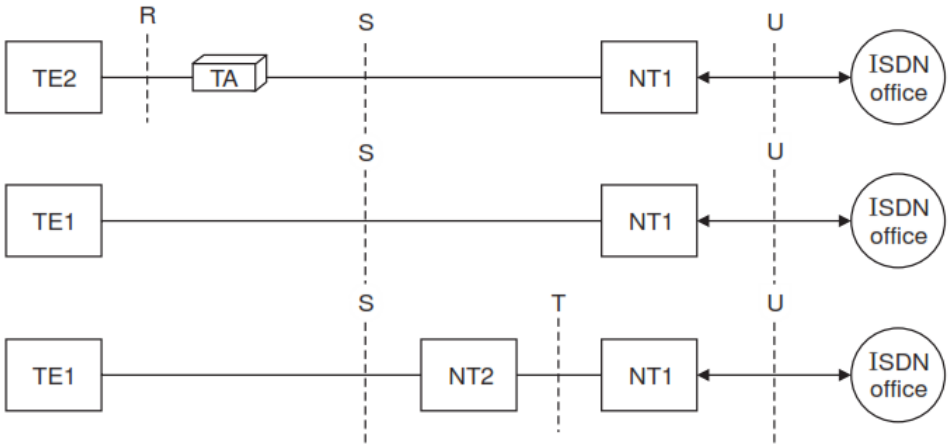

Fig. 12.9. Reference points.

ISDN specifies a number of reference points that define logical interfaces between functional groupings, such as TAs and NTls. ISDN reference points include the following:
• *R:* The reference point between non-ISDN equipment and a TA.
• *S:* The reference point between user terminals and the NT2.

• *T:* The reference point between NT1 and NT2 devices.
• *U*: The reference point between NT1 devices and line-termination equip-

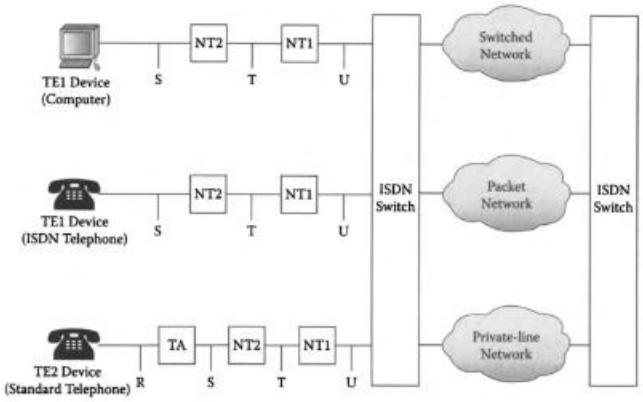

FIGURE 8.2 A typical ISDN configuration showing the relationships between devices and reference points.

The reference point R defines connection between a TE2 and a TA. R interface is not defined by the ISDN. A subscriber can use any of the EIA standards. The reference point S defines the connection between a TE1 or TA and TA and an NT1 (or NT2). ITU-7 specifics the ISO standard ISO 8887 for S interface. A maximum of 8 TE's can be connected to one ISDN line through 'S' bus wiring, even though only two can be in use at a time. RJ 45 cable called S bus having 8 wire ribbon type cable is available in electronic market. Reference point T defines the interface between an NT2 and NT1. Reference point U defines the interface between an NT1 and the ISDN office.

12.5. BROADBAND ISDN (B-ISDN)

B-ISDN provides the needs (High speed and large data handling) of the next generation technology. B-ISDN is a digital service with speed above 1.544 Mbps. The original ISDN is called narrow band ISDN (N-ISDN). B-ISDN uses fiber at all levels of telecommunications. BISDN provides two types of services. They are interactive (conversational or messaging or retrieval). The interactive service is bidirectional. The

distributive services are unidirectional (with user control or without user control). Several forms of B-ISDN exist. Some are listed below:

Frame relay service. Frame relay is considered to be a B-ISDN service. Frame relay is a packet switching protocol service offered by telephone corporations to replace the X-25 protocol. It is a WAN network.

Switched Multimegabit Digital Service (SMDS). SMDS is a digital service that provides a high speed digital path. The transport speed of SMDS is usually 155 Mbps.

ATM. The transport speed of most ATM applications are 155 Mbps.

B-ISDN uses the same functional groupings of N-ISDN. But named as B-NT1, B-NT2, B-TE1, B-TE2 and B-TA. B-ISDN uses the same R, S, T and U reference points. However, BISDN uses three different access methods to satisfy the user needs. They are symmetrical 155.52 Mbps, asymmetrical 155.520 Mbps and symmetrical 622.080 Mbps.

TABLE 8.1
ITU-T Narrowband and Broadband Channels

	Channel Date Rate	Application
Narrowband		
D	16–64 kbps	Signaling, data
B	64 kbps	Data, voice, fax
H0	384 kbps	Data, voice, fax, compressed video
H11	1.536 Mbps	PBX access, compressed video, high-speed data
H12	1.926 Mbps	PBX access, compressed video, high-speed data
Broadband		
H2	30–45 Mbps	Full-motion video, video telephone
H3	60–70 Mbps	Not defined
H4	120–140 Mbps	Enhanced video, bulk data transfer, fax

Source: M. L. Moore, *ISDN Strategies,* IDG Books, 1995, p. 168.

TABLE 8.3
Data Rates for Various ISDN Services

Service	Data Rate (kbps)
Slow-scan video	10
Voice mail	16
Voice (telephony)/fax	64
High-fidelity sound	768
Videoconference	10,000–70,100
Television (TV)	30,100–70,100
High-definition TV (HDTV)	140,100–565,100

Source: M. L. Moore, *ISDN Strategies*, IDG Books, 1995, p. 167.

8.2.3 Broadband ISDN Protocol Architecture

Figure 8.9 depicts the architecture for the BISDN protocol. The figure also shows how ATM fits into BISDN. The ATM system is divided into three functional layers, namely the physical layer, the ATM layer, and the ATM adaptation layer. Thus, the protocol for BISDN also adopts a layered approach, made up of four layers:

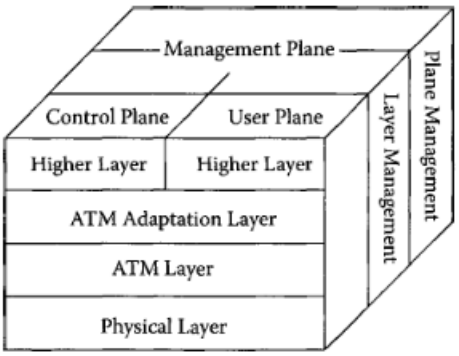

FIGURE 8.9 BISDN protocol reference model.

The physical, ATM, and AAL layers form the lower layers of the BISDN protocol reference model. As shown in Figure 8.9, the higher BISDN layers follow a three-plane approach. These three separate planes are referenced as:

- user plane
- control plane
- management plane

The user plane (U-plane) is responsible for user information transfer from one point to another along with associated controls such as flow control, congestion control, and error control. The U-plane contains all of the ATM layers.

The control or signaling plane (C-plane) manages the call-control and connection control functions. The C-plane shares the physical and ATM layers with the U-plane, and contains AAL functions dealing with signaling. The management plane (M-plane) provides the management functions and the capability to transfer information between the C and U-planes. This plane performs two functions: plane management and layer management. The plane management deals with the management functions necessary for the whole system (end-to-end);

Physical layer: The physical layer is responsible for basic physical layer activities such as information synchronization, bit timing, transmission frame generation and recovery, transmission frame adaptation, cell delineation, and cell header verification. The physical layer consists of two sub-layers: the physical medium sublayer and the transmission convergence sublayer. The specification of the physical medium sublayer depends on the medium used. The sublayer is responsible for transmitting/receiving a continuous flow of bits with associated timing information to synchronize transmission and reception. The transmission convergence sublayer is responsible for transmission frame generation and recovery, transmission frame adaptation, and cell delineation.

• ATM layer: The ATM layer provides the packet transfer capabilities. It is independent of the physical medium. The ATM layer is responsible for cell multiplexing and DE multiplexing. The cell multiplexing functions enable multiple logical connections across a single interface. The layer is also responsible for virtual path identifier (VPI) and virtual channel identifier (VCI) translation, cell header generation or extraction, and generic flow control.

• ATM adaptation layer (AAL): BISDN is required to be able to handle both packet and circuit-mode applications, thus the necessity for having the ATM adaptation layer (AAL). The AAL is needed to handle non ATM protocol, such as link access Protocol-D. The ATM adaptation layer consists of two sublayers:

the segmentation and reassemble sublayer (SAR) and the convergence sublayer (CS). The convergent sublayer provides specific application

support for applications using AAL. The segmentation reassemble sublayer packs the information received from CS into cells for transmission.

ACRONYMS

B-ISDN	—	Broad band ISDN
BRI	—	Basic Rate Interface
CPE	—	Customer Premises Equipment
CSV	—	Circuit Switched Voice
IDN	—	Integrated Digital Networks
ISDN	—	Integrated Services Digital Network
N-ISDN	—	Narrowband ISDN
NT	—	Network Termination
PRI	—	Primary Rate Interface
SMDS	—	Switched Multimegabit Digital Service
TA	—	Terminal Adapters
TE	—	Terminal Equipment

8.1.3 Architecture

ISDN has definitions for three basic layers, which are explained as follows.

Layer 1

As shown in Figure 8.3, ISDN physical-layer (layer 1) frame formats differ depending on whether the frame is outbound (from terminal to network) or inbound (from network to terminal). The frames are 48 bits long, of which 36 bits represent data. The bits of an ISDN physical-layer frame are used as follows:

- *F*: Provides synchronization
- *L*: Adjusts the average bit value
- *E*: Ensures contention resolution when several terminals contend for a channel
- *A*: Activates devices
- *S*: Unassigned
- *B1, B2, and D*: Handles user data

Multiple ISDN user devices can be physically attached to one circuit. In this configuration, collisions can result if two terminals transmit simultaneously. ISDN therefore provides features to determine link contention. When an NT receives a D bit from the TE, it echoes back the bit in the next E-bit position. The TE expects the next

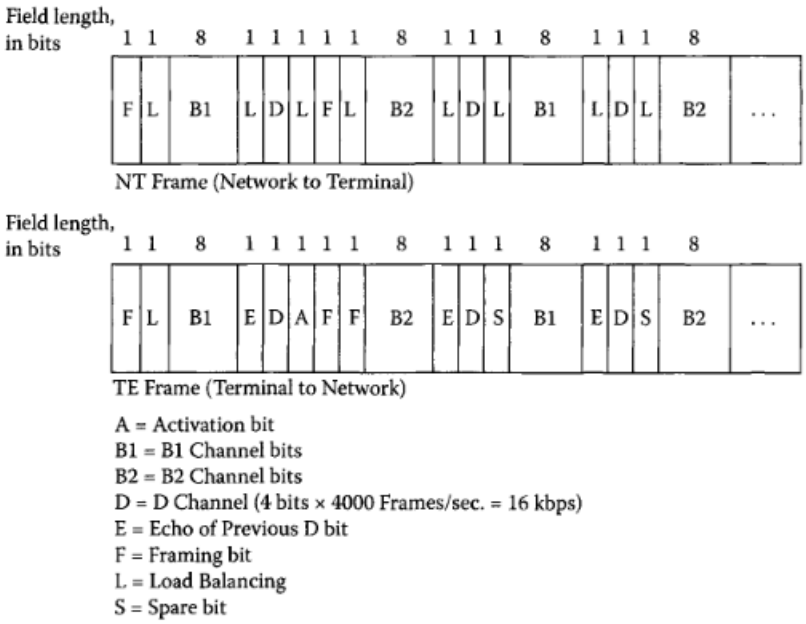

FIGURE 8.3 ISDN physical-layer frame formats differ depending on their direction.

E bit to be the same as its last transmitted D bit. If the TE detects a bit in the echo (E) channel that is different from its D bits, it must stop transmitting immediately. This simple technique ensures that only one terminal can transmit its D message at one time. After successful D message transmission, the terminal has its priority reduced by requiring it to detect more continuous ones before transmitting. Terminals cannot raise their priority until all other devices on the same line have had an opportunity to send a D message. Telephone connections have higher priority than all other services, and signaling information has a higher priority than nonsignaling information.

Layer 2

Layer 2 of the ISDN signaling protocol is *link access procedure, D channel* (*LAPD*). This layer is used across the D channel to ensure that control and signaling information flows and is received properly. As shown in Figure 8.4, the LAPD frame format is almost identical to the X.25 LAPB protocol (see Figure 2.3).

Address: 1 or 2 bytes
SAPI (service access point identifier): 6-bits
C/R (command/response): bit indicates if the frame is a command or a response
A0 (address extension): bit indicates whether this is the final octet of the address or not
TEI (terminal endpoint identifier): 7-bit device identifier
EA1 (address extension): same as EA0

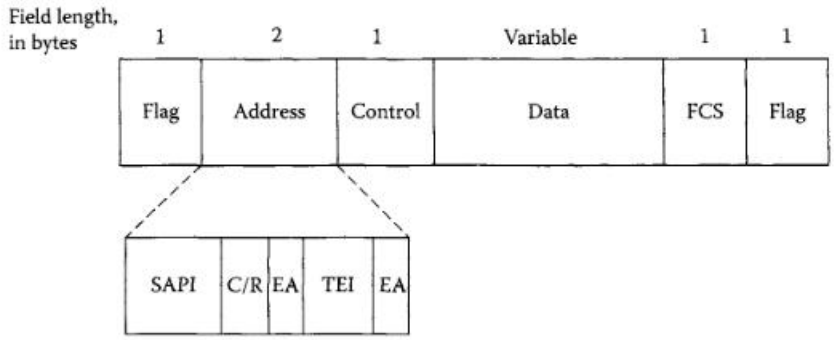

SAPI = Service Access Point Identifier (8 bits)
C/R = Command/Response bit
EA = Extended Addressing bits
TEI = Terminal Endpoint Identifier

FIGURE 8.4 LAPD frame format is similar to LAPB.

FIGURE 8.4 LAPD frame format is similar to LAPB.

Control (2 bytes): The frame level control field indicates the frame type (information, supervisory, or unnumbered) and sequence numbers as required
Information: Layer 3 protocol information and user data
CRC (2 bytes): Cyclic redundancy check is a low-level test for bit errors on the user data
Flag (1 byte): This is always $7E_{16}$ (or $0111\ 1110_2$)

The LAPD *address* field can be either 1 or 2 bytes long. If the extended address bit of the first byte is set, the address is 1 byte; if it is not set, the address is 2 bytes. The first address-field byte contains the service access point identifier (SAPI), a 6-bit field that identifies the point where layer 2 provides a service to layer 3. The *terminal end-point identifiers* (TEIs) are unique IDs given to each device (TE) on an ISDN S/T bus. The field identifies either a single terminal or multiple terminals. A TEI of all ones indicates a broadcast. The value may be assigned statically when the TE is installed, or dynamically when activated.

Layer 3

Layer 3 is used for the establishment, maintenance, and termination of logical network connections between two devices. A variety of call-establishment, call termination, information, and miscellaneous messages are specified, including SETUP, CONNECT, RELEASE, USER INFORMATION, CANCEL, STATUS, and DISCONNECT. These messages are functionally similar to those provided by the X.25

protocol. Figure 8.5 shows the typical stages of an ISDN circuit-switched call.

Diagram from Flood Call set up with BRI & PRI.